KUYSEN ENTERPRISES, INC.

hansgrohe

Brand :	Hansgrohe, Germany
Name :	Metris Select Sink Mixer
Item Code :	73806.000
Designer:	
Color/Finish :	Chrome
Dimensions:	(Please see data drawing below for dimensions)

Product info:

- Comfort Zone 320
- Swivel range adjustable in 2 steps to 110° or 150°
- Flexible position of faucet controls, 2 tap holes with
- Ø 35 mm required
- push of control unit: intuitive start and stop function of the water flow, turn: automatic drain operation
- Laminar spray, shower spray
- MagFit magnetic shower support
- Maximum flow rate at 3 bar: 7 l/min · ceramic cartridge
- Connection type: G ⅜ connections
- Integrated non-return valve
- Suitable for continuous flow water heaters
- Box for quiet, smooth and protected hose guidance in the cabinet, under the countertop
- Extension length up to 76 cm

Add-on:

- 2 x Angle valve 1 /2 x 3 /8 with conical nut

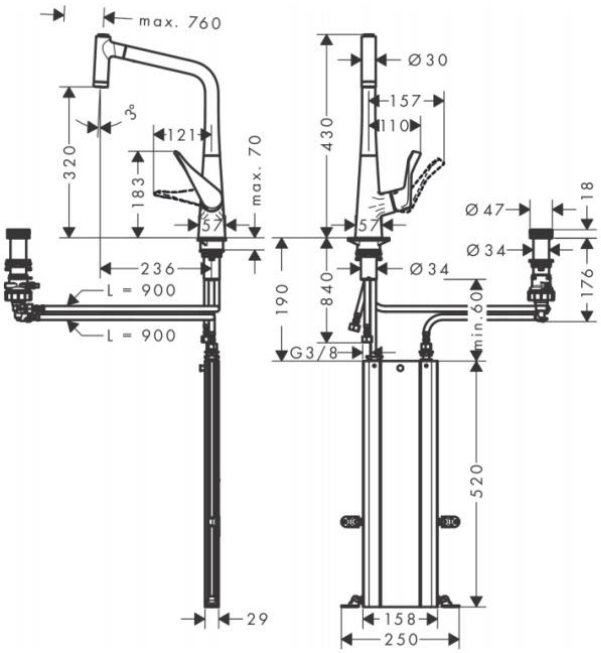

Technology

Flowchart

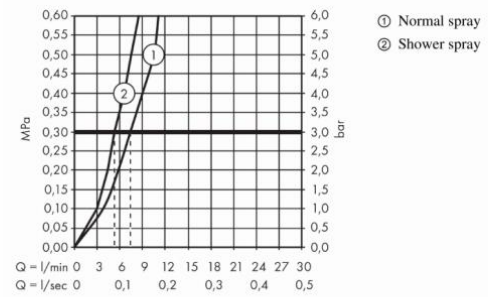

Flushing of pipe must be done before fittings are installed. Failure to do so voids the warranty.
Follow cleaning instructions and avoid using any harmful chemicals.
All information is for reference only. Installation shall always be based on the specs provided with actual delivered items.
For more info, visit **www.kuysen.com**