KUYSEN
ENTERPRISES, INC.

hansgrohe

Brand :	HANSGROHE, Germany
Name :	Ceiling connector S
Item Code :	27630.000
Designer :	
Color / Finish:	Matt White
Dimensions :	Overall (LxWxH in cm)

Product info:

- consists of: overhead shower, hand shower, shower thermostat, shower hose, slider, shower bar
- overhead shower Croma E 280 1jet
- shower head size overhead shower: 280 x 170 mm
- spray type overhead shower: RainAir
- ball-joint: overhead shower angle adjustable
- fully chrome-plated spray disc
- spray type hand shower: Massage spray, IntenseRain, SoftRain
- maximum flow rate at 3 bar: 15 l/min
- minimum flow pressure: 1,7 bar
- height-adjustable slider with locking push-button
- swivel shower arm
- CoolContact thermostat: Prevents the housing from heating up, making showering even safer
- suitable for continuous flow water

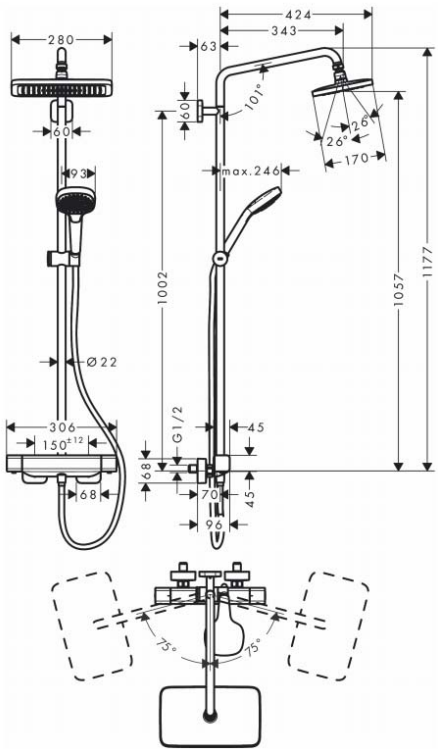

Flushing of pipe must be done before fittings are installed. Failure to do so voids the warranty.
Follow cleaning instructions and avoid using any harmful chemicals.
All information is for reference only. Installation shall always be based on the specs provided with actual delivered items.
For more info, visit **www.kuysen.com**