KUYSEN
ENTERPRISES, INC.

AXOR

Brand :	AXOR, Germany
Name :	MONTRUEX Floor mounted tub mixer
Item Code :	16553.000
Designer :	Phoenix Design
Color / Finish:	Chrome
Dimensions :	Overall (LxWxH in cm)

Product info:

- Consists of: 2-handle bath mixer floor standing, hand shower, shower hose, shower holder
- Projection 234 mm
- Spray type mixer: normal spray
- Spray type hand shower: RainAir
- Maximum flow rate at 3 bar: 19,5 l/min
- Flow rate for bath spout at 3 bar: 19,5 l/min
- Flow rate of hand shower at 3 bar: 13 l/min
- Min. operating pressure: 1 bar · max. : 10 bar
- Ceramic valves hot/ cold 90°
- Suitable for continuous flow water

Add-on:

- 2 x 96441.000 sealing foil
- 1 x 16549.180 concealed part

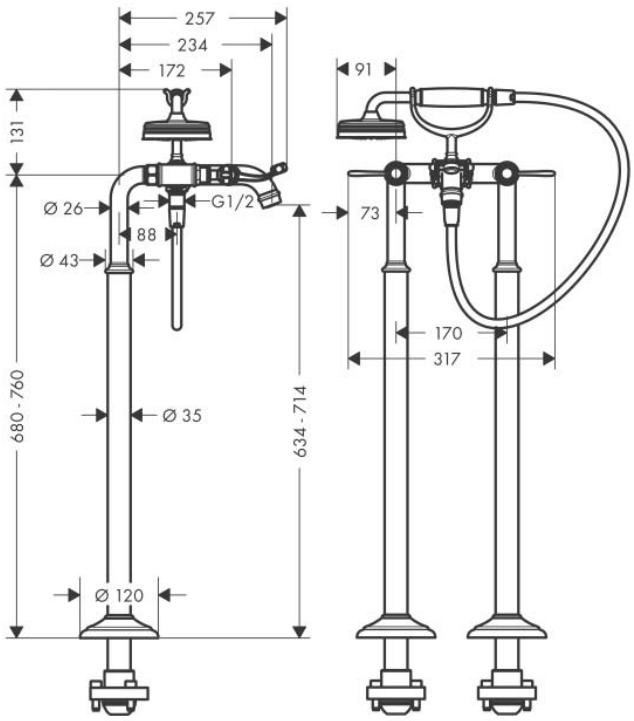

Flushing of pipe must be done before fittings are installed. Failure to do so voids the warranty.
Follow cleaning instructions and avoid using any harmful chemicals.
All information is for reference only. Installation shall always be based on the specs provided with actual delivered items.
For more info, visit **www.kuysen.com**