236 E. Rodriguez Senior Avenus, Barangay Don Manuel, Quezon City, Metro Manila, Philippines 1113.
Tel: (+632) 740 7509 E-mail: info@kuysen.com

KUYSEN ENTERPRISES, INC.

SPECIFICATION SHEET - appliances

BRAND:	teka
ORIGIN:	Spain
SERIES:	Island Hood
PRODUCT DESCRIPTION:	**Island Hood DH2.980** with: Backlit electronic panel with white display EcoPower motor 3 speeds, 1 intensive, 4 LED lamps exhaust capacities: free oulet 850 m3/h maximum 400 m3/h minimum 295 m3/h
MODEL No.	4048.4630
FINISH/COLOUR:	Stainless Steel
DIMENSIONS:	900 x 600mm
OPTIONAL MATCHING PARTS:	

Product Photo:

Technical Informations:

Voltage: 220V / 50~60 Hz
Power: 242 W
Phase: single+grounding

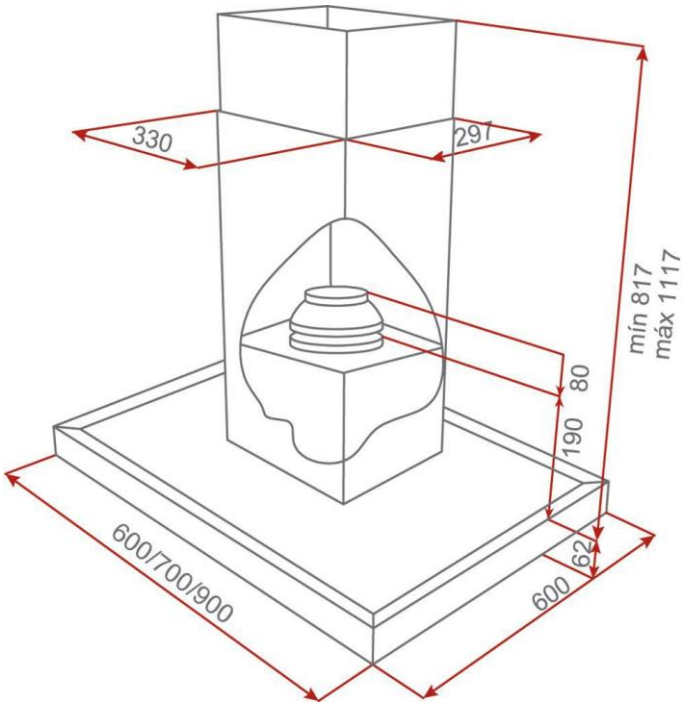

REMINDER:	Do not use cleaners containing abrasive cleansers, ammonia, bleach, acids, waxes, alcohol, solvents or other products not recommended for chrome.
	All information is for reference only, installation shall always be based on the actual product delivered.